SRK LED SERIES

INSTALLATION INSTRUCTIONS

- **WARNING: Risk of fire or electric shock. This product must be installed in accordance with the applicable installation code by a person familiar with the construction and operation of the product and the hazards involved.**
- **The retrofit kit is accepted as a component of luminaire where the suitability of the combination shall be determined by CSA or authorities having jurisdiction. Product must be installed by a qualified electrician in accordance with the applicable and appropriate electrical codes. The installation guide does not supersede local or national regulations for electrical installations.**
- **WARNING: Risk of fire or electric shock. Install this kit only in luminaires that have the construction features and dimensions shown in the photographs and/or drawings.**
- **WARNING: Risk of fire. Input ratings may need to be determined based on any configuration(s) permitted by the installation instructions. Regardless of the configurations(s) of the retrofit kit, the input rating of the overall retrofit kit shall not exceed the marked input ratings of the host luminaire.**
- **WARNING: Risk of fire or electric shock. Luminaire wiring and electrical parts may be damaged when drilling for installation of LED retrofit kit. Check for enclosed wiring and components.**
- **WARNING: To prevent wiring damage or abrasion, do not expose wiring to edges of sheet metal or other sharp objects.**
- **Installers should examine all parts that are intended to be used by the retrofit kit for damage and replace any damaged parts prior to installation of the retrofit kit.**
- **Do not make or alter any open holes in an enclosure of wiring or electrical components during kit installation.**
- **Only those open holes indicated in the photographs and/or drawings may be made or altered as a result of kit installation. Do not leave any other open holes in an enclosure of wiring or electrical components.**
- **Make sure all electrical power is turned off while installing the fixture.**
- **Disconnect power before servicing.**
- **This luminaire must be adequately grounded for protection against shock hazards and to assure proper operation.**
- **LEDs are ESD (Electro Static Discharge) sensitive devices that can be easily damaged if the proper ESD mitigating steps are not taken.**
- **LEDs are very sensitive to mechanical damage. Caution must be taken to avoid damage to the LEDs.**
- **ESD or mechanical damage voids all warranties.**
- **Prior to installation, review all environmental designation locations in the retrofit kit installation instructions. Only install in damp locations if so indicated in the installation instructions.**
- **Suitable for dry and damp locations.**
- **For use with surface or suspended mount fluorescent style luminaires. Retrofit only with strip luminaires. Suitable for use with luminaires with specific dimensions of lamp compartment of the host luminaries.**

PARTS LIST

- (1) Wireway cover LED retrofit kit assembly
- (2) SRK brackets.

FOR USE WITH EXISTING STRIP FIXTURES ONLY.

The SRK series (Strip Retrofit Kit) is designed to fit any existing fluorescent strip housing (within dimensional limits shown on specification sheet) with end plates, made by any manufacturer; however, H.E. Williams, Inc. suggests installing the kit on one of the existing fixtures to check compatibility before beginning a complete retrofit.

Make sure all electrical power is turned off while installing the retrofit kit assembly. Remove the wireway cover, sockets, and ballast(s) (optional) from the existing fixture so that only the empty channel and end plates remain.

Install accordingly:

SRK LED SERIES

INSTALLATION INSTRUCTIONS

STEP 1: Slide SRK brackets in from the side of the fixture using one of the two distances provided in the SRK wireway cover.

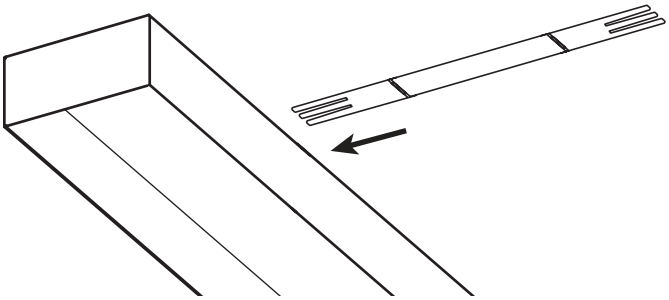

STEP 2: Center brackets on the fixture housing.

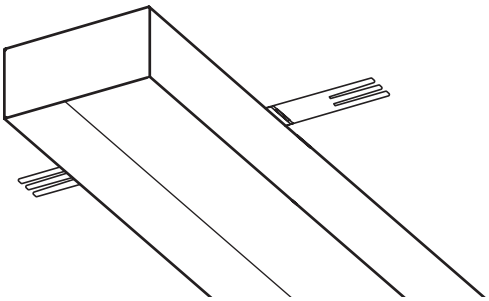

STEP 3: Hand bend both ends of SRK brackets downwards.

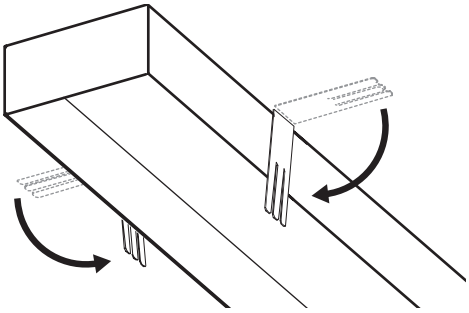

STEP 4: Hand bend outer tabs on the SRK brackets around the fixture housing sides to keep SRK brackets in the desired position.

FIG 4.1

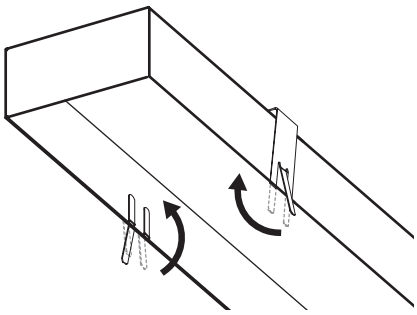

STEP 5: Make electrical connections in accordance with NEC and local codes.

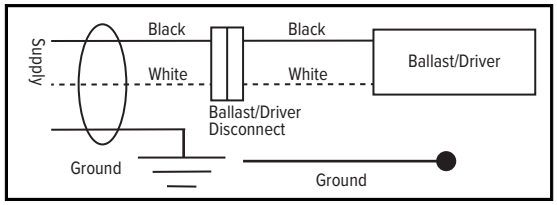
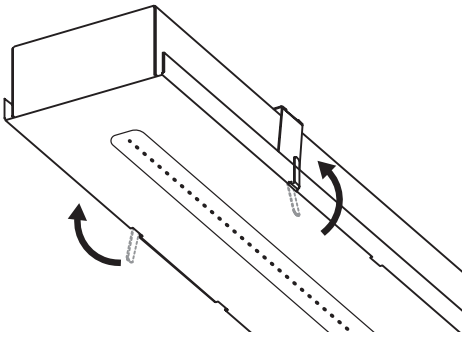
STEP 6: Place SRK wireway cover over existing fixture housing/SRK brackets using the provided slots in the wireway cover for the center tabs on the SRK brackets. While holding SRK wireway cover in place, hand bend the center tabs on the SRK brackets over and around the wireway cover to secure it to the existing fixture.